kirloskar
Oil Engines

BETTER POWER FOR A *limitless* TOMORROW

750 kVA
Data Center Continuous

Technical Specifications

DCC Power Rating at rated rpm (As Per ISO 8528-1) [1]		SINGLE UNIT OPTIONS	
		kVA	750
		kWe	600
Genset Model			**KG4-750 DC WS**
Frequency		Hz	50
Power factor		lagging	0.8
Voltage		V	415
Governing Class (As per ISO 8528 Part-V)			G3
Fuel Consumption[2]	100%	Ltr / Hr	154
	75%		126
Weight of genset with canopy (approx.)[3]	Dry	Kg	8300
Overall dimensions of genset[3]	Length	mm	6800
	Width	mm	2300
	Height	mm	2713
Electrical Battery starting voltage		Volts-DC	24 VDC
ENGINE			
Engine Model			DV12ETA 4G2
Rated output		kW	662
		HP	901
No. of Cylinder		Number	12
Cubic capacity[4]		Ltrs	23.88
Engine Design Configuration		Type	V - Type
Rated Speed		RPM	1500
Lube Oil System Capacity		Ltrs	81
ALTERNATOR			
No of Poles / Phase / Type			4 Pole / 3 Phase / Synchronous
Excitation Type			AREP, Brushless, Self - Excited
Voltage Regulation			Digital
Ingress Protection			IP 23
Permissible Voltage Dip at Full Load 0.8 pf Lag			≤20%
Winding Pitch			2/3
Short Circuit Withstand Time		sec	3 Times rated current for 10 Secs
Accessories			Winding & Bearing Temperature Detector (Without Monitoring) & Space Heater

Notes:
2 With 0.845 Specific Gravity of diesel (5% Tolerance)
3 Tolerances Apply
3 These weight are for handling & transportation only, ±5% tolerance apply

For Site Conditions other than standard operating conditions consult Kirloskar Oil Engines Ltd.
For intermediate ratings, kindly contact nearest Kirloskar office

7 Easy steps for a happy Genset Ownership

- Insist on a load-study
- Select the Genset rating as per the load-study and with sufficient margin for future load expansion
- Apply site-selection guidelines carefully
- Insist on installation in line with Kirloskar guidelines
- Ensure adequate size and proper connection of cables
- Understand the Genset operation & maintenance procedures during commissioning
- Follow routine maintenance protocols through authorized Kirloskar service dealers

Canopy
- Ease of Access and Serviceability
- Aesthetically designed, weather and sound resistant enclosure
- Insulation conforms to UL94-HF1 class for flammability

Controller
- Microprocessor based
- Graphical LCD display
- Best in class monitoring and diagnostic capability
- Integrable with AMF, synchronization & communication configurations

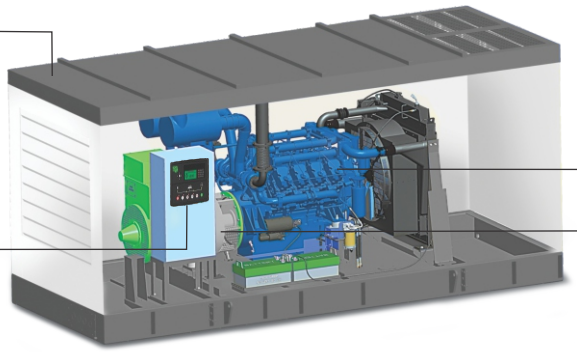

Engine
- O2E Series: Low emission, high efficiency engines
- Compact, Robust and Rugged Design
- 500 hours lube-oil change period
- Integral set - mounted radiator system, designed & tested for 50°C ambient temperature

Alternator
- Best In Class Efficiency
- Special Windings to Reduce Harmonics
- Vacuum Pressure Impregnation and epoxy gel coating on the winding

Kirloskar
Oil Engines

Data Center Continuous Power [1]

'Data Center Continuous Power (DCCP) rating is designed and developed specific to a Data Center application where a reliable utility power is available . DCCP offers continuous maximum power for variable or continuous electrical load with unlimited run hours. This product complies with Tier III and Tier IV requirement of Uptime Institute . Ratings are in accordance with ISO 8528-1, ISO 3046-1 and BS 5514 .The average load factor is ≤100%.

Engine capacity does matter [4]

Engine capacity (cc) plays a vital role in Genset performance. Higher engine capacity leads to a robust and stable Genset performance.

Higher engine capacity also enables the Genset to respond quickly & positively to sudden load additions.

Genset Monitoring at Your Finger Tips

Kirloskar gensets are enabled with Kirloskar remote monitoring system which shares Real Time Genset information and location Services. It can be accessed via mobile device or desktop. Kirloskar remote monitoring system also highlights any parameter which needs special attention. These critical indication alerts are sent to user mobile via text message. It also alerts nearest services dealer is case of any emergency break-down.

KRM Desktop Display

Ask your Dealer for KRM login details & password

Peace-of-mind Ownership

Kirloskar gensets have always been preferred for their robust design and reliability over long usage life.

Kirloskar gensets range carries the confidence of well-established and proven engine platforms. For compliance to revised CPCB norms, Kirloskar has carefully selected those technologies which not only retain, but enhance Gensets durability and on-site serviceability.

Thus, Kirloskar gensets offer you many years of trouble-free performance; backed by the assurance of prompt support. Peace-of-mind driven by product reliability and low cost of ownership.

State of the art Genset Controller

Kirloskar genset put the command in your hands. Micro-processor based Genset controllers display a host of genset parameters and put all controls at your fingertips.

Monitoring Features:

- Phase Voltages & Currents, Frequency, Reverse power, Genset kVA, kW, kWh, kVAr, Power Factor, Canopy Temperature
- Lube oil Pressure, Engine Temperature, RPM, Run Hours, Number of starts, Fuel Level, Auto / Manual Stop, Battery charge condition, AMF feature

Diagnostic Features :

- Battery charging failure, Over/Under speed, Over Current, Over/Under Voltage, Over kW, Phase Seq., Phase missing, Mains Under voltage, Earth Fault trip, Fuel usage Alarm
- Low lube oil Pressure, High Engine Temperature, Low/High battery voltage, Low Fuel Level, Over Crank protection, Routine maintenance indicator, Genset Test Facility, Mains Frequency

Genset Controller

Optional Features:

- Modbus Communication
- Synchronization

EFFICIENCY. INTEGRATED

A KIRLOSKAR PROMISE

Efficient Products

- India's first IoT enabled digital genset
- Designed for convenient user experience
- Best-in-class fuel efficiency delivered
- Compact design & long life product
- Optimized consumption of lubricant oil
- Optimized total cost of ownership (TCO)
- All products tested before delivery

EFFICIENT PRODUCTS

EFFICIENT SOLUTIONS

Efficient Solutions

- Load sizing for every single genset order
- One stop power back-up solutions
- Serves complete application gamut
- Highly trained & experienced team
- Non-conventional solutions (bio-diesel)
- Specific solution for harsh environments
- Exhaust mgmt., foundation, cabling etc.

Efficient Service

- India's widest service dealer network
- Kirloskar connect-self-service application
- eFSR-Electronic field service report
- Over 6000 trained service engineers
- Over 600,000 machines under care
- 98%+ parts available at each outlet
- Flexible & economical AMC-Bandhan

EFFICIENT SERVICE

EFFICIENT NETWORK

Efficient Network

- Consistent, reliable & long-established
- 250+ expert touch points across India
- 500+ solution oriented professionals
- Uniform customer experience across
- Central system for enquiry to PRF
- Fair trade practices & Price transparency

Efficient Deliveries

- Cost-effective deliveries guaranteed
- Assured 7-day delivery of gensets
- Supports project management system
- Reduced working capital for customer
- Award-winning replenishment model
- Assurance of FRESH products always

EFFICIENT DELIVERIES

EFFICIENT 24X7 CARE

Efficient 24X7 Care

- 24 X 7 operational customer care centre
- Team of over 70 trained & focused exec.
- Tracking every service request till closure
- Centrally maintained CRM for all requests
- Satisfaction call after every SR closure
- Central sales lead tracking system
- Continuous NPS and CDI measurement

kirloskar Oil Engines

www.kirloskaroilengines.com

Kirloskar Oil Engines Limited

A Kirloskar Group Company

Laxmanrao Kirloskar Road, Khadki,
Pune 411 003 INDIA.

88 06 33 44 33

koel.sales@kirloskar.com

Stamp of Authorised Representative

Mark bearing word 'Kirloskar' in any form as a suffix or prefix is owned by Kirloskar Proprietary Ltd. and Kirloskar Oil Engines Ltd. is the Permitted User.
This Catalog is copyrighted and may not be reproduced in any form not even parts of it, without previous written permission by copyright owners, Kirloskar Oil Engines Ltd.
Product improvement is a continuous process. Kindly contact Kirloskar for latest information.
Images are for illustration purposes only.